HALF MOON CHAIR

VONNEGUT
KRAFT
info@vonnegutkraft.com
vonnegutkraft.com

Designed	2013
Description	Chair
Dimensions	32” H x 17.5” W x 19.5” D
Material	Solid Ash
Finish	Available in satin black, sunset peach lacquer finsh Custom colors available for an additional fee.
Lead Time	Please Allow 8-10 Weeks
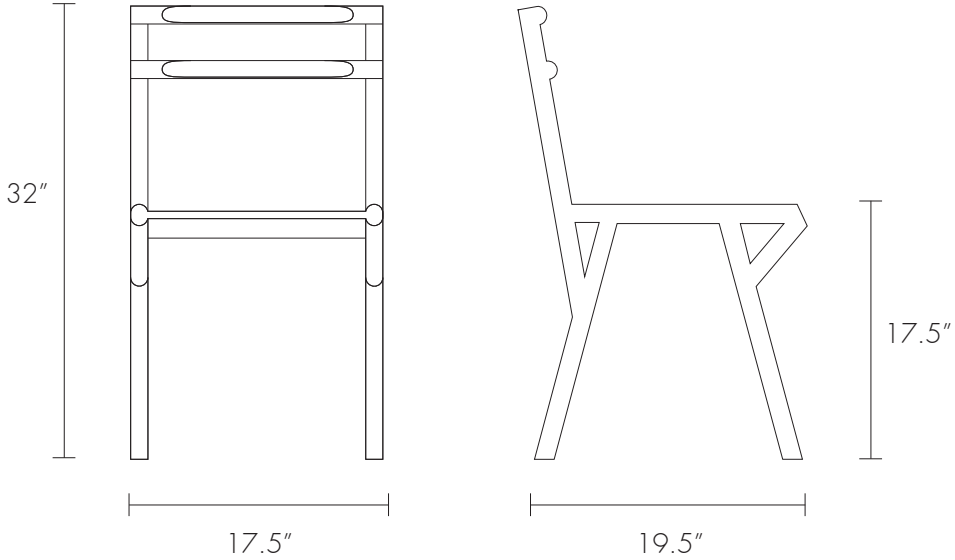
Half Moon Chair features various intersections of half round ash stock that unify into a set of dynamic joints. With its subtle allusions to Danish modern proportions, classic Japanese joinery and iconic Memphis forms, Half Moon derives sculptural elegance from the simplest of forms.